PA-2 and PA-4 Power Adapters

User Manual

96A0096, Rev. S, 2018/10/05

ADB SAFEGATE

A.0 Disclaimer / Standard Warranty

CE certification

The equipment listed as CE certified means that the product complies with the essential requirements concerning safety and hygiene. The directives that have been taken into consideration in the design are available on written request to ADB SAFEGATE.

ETL certification

The equipment listed as ETL certified means that the product complies with the essential requirements concerning safety and FAA Airfield regulations. The directives that have been taken into consideration in the design are available on written request to ADB SAFEGATE.

LED Product Guarantee

Where applicable, per FAA EB67(applicable edition), ADB SAFEGATE L858(L) Airfield Guidance Signs are warranted against electrical defects in design or manufacture of the LED or LED specific circuitry for a period of 4 years. ADB SAFEGATE LED light fixtures (with the exception of obstruction lighting) are warranted against mechanical and physical defects in design or manufacture for a period of 12 months from date of installation; and are warranted against electrical defects in design or manufacture of the LED or LED specific circuitry for a period of 4 years per FAA EB67 (applicable edition).

Note

See your sales order contract for a complete warranty description. In some specific cases, deviations are (to be) accepted in the contract, which will supersede the standard warranty.

Standard Product Guarantee

Products of ADB SAFEGATE manufacture are guaranteed against mechanical, electrical, and physical defects (excluding lamps) which may occur during proper and normal use for a period of one year from the date of installation or 2 years from date of shipment and are guaranteed to be merchantable and fit for the ordinary purposes for which such products are made. ADB SAFEGATE L858 Airfield Guidance Signs are warranted against mechanical and physical defects in design or manufacture for a period of 2 years from date of installation per FAA AC 150/5345-44 (applicable edition).

Note

See your sales order contract for a complete warranty description.

All Products Guarantee

LED Products of ADB SAFEGATE, manufactured and sold by ADB SAFEGATE or its licensed representatives, meets the corresponding requirements of FAA, ICAO and IEC.

ADB SAFEGATE will correct by repair or replacement per the applicable guarantee above, at its option, equipment or parts which fail because of mechanical, electrical or physical defects, provided that the goods have been properly handled and stored prior to installation, properly installed and properly operated after installation, and provided further that Buyer gives ADB SAFEGATE written notice of such defects after delivery of the goods to Buyer. Refer to the Safety section for more information on Material Handling Precautions and Storage precautions that must be followed.

ADB SAFEGATE reserves the right to examine goods upon which a claim is made. Said goods must be presented in the same condition as when the defect therein was discovered. ADB SAFEGATE furthers reserves the right to require the return of such goods to establish any claim.

ADB SAFEGATE's obligation under this guarantee is limited to making repair or replacement within a reasonable time after receipt of such written notice and does not include any other costs such as the cost of removal of defective part, installation of repaired product, labor or consequential damages of any kind, the exclusive remedy being to require such new parts to be furnished.

Copyright © ADB Safegate, All Rights Reserved

ADB SAFEGATE's liability under no circumstances will exceed the contract price of goods claimed to be defective. Any returns under this guarantee are to be on a transportation charges prepaid basis. For products not manufactured by, but sold by ADB SAFEGATE, warranty is limited to that extended by the original manufacturer.

This is ADB SAFEGATE's sole guarantee and warranty with respect to the goods; there are no express warranties or warranties of fitness for any particular purpose or any implied warranties of fitness for any particular purpose or any implied warranties other than those made expressly herein. All such warranties being expressly disclaimed.

Liability

WARNING
Use of the equipment in ways other than described in the catalogue leaflet and the manual may result in personal injury, death, or property and equipment damage. Use this equipment only as described in the manual.

ADB SAFEGATE cannot be held responsible for injuries or damages resulting from non-standard, unintended uses of its equipment. The equipment is designed and intended only for the purpose described in the manual. Uses not described in the manual are considered unintended uses and may result in serious personal injury, death or property damage.

Unintended uses includes the following actions:

- Making changes to equipment that have not been recommended or described in this manual or using parts that are not genuine ADB SAFEGATE replacement parts or accessories.
- Failing to make sure that auxiliary equipment complies with approval agency requirements, local codes, and all applicable safety standards if not in contradiction with the general rules.
- Using materials or auxiliary equipment that are inappropriate or incompatible with your ADB SAFEGATE equipment.
- Allowing unskilled personnel to perform any task on or with the equipment.

© ADB SAFEGATE BVBA

This manual or parts thereof may not be reproduced, stored in a retrieval system, or transmitted, in any form or by any means, electronic, mechanical, photocopying, recording, nor otherwise, without ADB SAFEGATE BVBA's prior written consent.

This manual could contain technical inaccuracies or typographical errors. ADB SAFEGATE BVBA reserves the right to revise this manual from time to time in the contents thereof without obligation of ADB SAFEGATE BVBA to notify any person of such revision or change. Details and values given in this manual are average values and have been compiled with care. They are not binding, however, and ADB SAFEGATE BVBA disclaims any liability for damages or detriments suffered as a result of reliance on the information given herein or the use of products, processes or equipment to which this manual refers. No warranty is made that the use of the information or of the products, processes or equipment to which this manual refers will not infringe any third party's patents or rights. The information given does not release the buyer from making their own experiments and tests

Copyright © ADB Safegate, All Rights Reserved

TABLE OF CONTENTS

1.0 Safety....1
1.1 Safety Messages....1
1.1.1 Introduction to Safety....2
1.1.2 Intended Use....2
1.1.3 Maintenance Safety....3
1.1.4 Arc Flash and Electric Shock Hazard....3

2.0 PA-4 5
2.1 About this manual 5
2.2 How to work with the manual 5

3.0 Introduction 7
3.1 Power Adapters....8
3.2 Power Adapter: Required Equipment 9
3.3 Specifications 9

4.0 Installation 11
4.1 Installation 11
4.1.1 Method of Installation 11
4.1.2 Wiring Installation for ADB Safegate Products 11
4.1.3 Paralleling PA-4 Power Adapters 12
4.2 Wiring Checkout and Startup 13

5.0 Repair (PA-4 Only) 15
5.1 Disassembling PA-4 Power Adapter 15
5.2 Assembling PA-4 Power Adapter 16
5.3 Changing PA-4 Power Adapter Tap Settings 17
5.4 Replacing PA-4 Fuses 17

6.0 Parts 19

7.0 Wiring Schematics 21
7.1 Power Adapter Wiring Connections for L- 849A-C REIL 21
7.2 Power Adapter Wiring Connections for L- 849E REIL 22
7.3 Power Adapter Wiring Connections for Externally Lighted L-806/L- 807 Wind Cones 22
7.4 Power Adapter Wiring Connections for Generic Loads 23

A.0 SUPPORT.... 25
A.1 ADB Safegate website....25
A.2 Recycling....25
A.2.1 Local authority recycling....25
A.2.2 ADB Safegate recycling.... 25

Copyright © ADB Safegate, All Rights Reserved

Copyright © ADB Safegate, All Rights Reserved

1.0 Safety

Introduction to Safety

This section contains general safety instructions for installing and using ADB SAFEGATE equipment. Some safety instructions may not apply to the equipment in this manual. Task- and equipment-specific warnings are included in other sections of this manual where appropriate.

1.1 Safety Messages

HAZARD Icons used in the manual

For all HAZARD symbols in use, see the Safety section. All symbols must comply with ISO and ANSI standards.

Carefully read and observe all safety instructions in this manual, which alert you to safety hazards and conditions that may result in personal injury, death or property and equipment damage and are accompanied by the symbol shown below.

	WARNING Failure to observe a warning may result in personal injury, death or equipment damage.
	Danger - Risk of electrical shock or ARC FLASH Disconnect equipment from line voltage. Failure to observe this warning may result in personal injury, death, or equipment damage. ARC Flash may cause blindness, severe burns or death.
	WARNING - Wear personal protective equipment Failure to observe may result in serious injury.
	WARNING - Do not touch Failure to observe this warning may result in personal injury, death, or equipment damage.
	CAUTION Failure to observe a caution may result in equipment damage.

Qualified Personnel

	Important Information The term **qualified personnel** is defined here as individuals who thoroughly understand the equipment and its safe operation, maintenance and repair. Qualified personnel are physically capable of performing the required tasks, familiar with all relevant safety rules and regulations and have been trained to safely install, operate, maintain and repair the equipment. It is the responsibility of the company operating this equipment to ensure that its personnel meet these requirements. Always use required personal protective equipment (PPE) and follow safe electrical work practice.

Copyright © ADB Safegate, All Rights Reserved

1.1.1 Introduction to Safety

CAUTION

Unsafe Equipment Use
This equipment may contain electrostatic devices, hazardous voltages and sharp edges on components

- Read installation instructions in their entirety before starting installation.
- Become familiar with the general safety instructions in this section of the manual before installing, operating, maintaining or repairing this equipment.
- Read and carefully follow the instructions throughout this manual for performing specific tasks and working with specific equipment.
- Make this manual available to personnel installing, operating, maintaining or repairing this equipment.
- Follow all applicable safety procedures required by your company, industry standards and government or other regulatory agencies.
- Install all electrical connections to local code.
- Use only electrical wire of sufficient gauge and insulation to handle the rated current demand. All wiring must meet local codes.
- Route electrical wiring along a protected path. Make sure they will not be damaged by moving equipment.
- Protect components from damage, wear, and harsh environment conditions.
- Allow ample room for maintenance, panel accessibility, and cover removal.
- Protect equipment with safety devices as specified by applicable safety regulations
- If safety devices must be removed for installation, install them immediately after the work is completed and check them for proper functioning prior to returning power to the circuit.

Failure to follow this instruction can result in serious injury or equipment damage

Additional Reference Materials

Important Information

- IEC - International Standards and Conformity Assessment for all electrical, electronic and related technologies.
- IEC 60364 - Electrical Installations in Buildings.
- FAA Advisory: AC 150/5340-26 (current edition), chapter 45, section 4, Maintenance of Airport Visual Aid Facilities.
- Maintenance personnel must refer to the maintenance procedure described in the ICAO Airport Services Manual, Part 9.
- ANSI/NFPA 79, Electrical Standards for Metalworking Machine Tools.
- National and local electrical codes and standards.

1.1.2 Intended Use

CAUTION

Use this equipment as intended by the manufacturer
This equipment is designed to perform a specific function, do not use this equipment for other purposes

- Using this equipment in ways other than described in this manual may result in personal injury, death or property and equipment damage. Use this equipment only as described in this manual.

Failure to follow this instruction can result in serious injury or equipment damage

Copyright © ADB Safegate, All Rights Reserved

1.1.3 Maintenance Safety

DANGER

Electric Shock Hazard
This equipment may contain electrostatic devices

- Do not operate a system that contains malfunctioning components. If a component malfunctions, turn the system OFF immediately.
- Disconnect and lock out electrical power.
- Allow only qualified personnel to make repairs. Repair or replace the malfunctioning component according to instructions provided in its manual.

Failure to follow these instructions can result in death or equipment damage

1.1.4 Arc Flash and Electric Shock Hazard

DANGER

Series Circuits have Hazardous Voltages
This equipment produces high voltages to maintain the specified current - Do NOT Disconnect while energized.

- Allow only qualified personnel to perform maintenance, troubleshooting, and repair tasks.
- Only persons who are properly trained and familiar with ADB SAFEGATE equipment are permitted to service this equipment.
- An open airfield current circuit is capable of generating >5000 Vac and may appear OFF to a meter.
- Never unplug a device from a constant current circuit while it is operating; Arc flash may result.
- Disconnect and lock out electrical power.
- Always use safety devices when working on this equipment.
- Follow the recommended maintenance procedures in the product manuals.
- Do not service or adjust any equipment unless another person trained in first aid and CPR is present.
- Connect all disconnected equipment ground cables and wires after servicing equipment. Ground all conductive equipment.
- Use only approved ADB SAFEGATE replacement parts. Using unapproved parts or making unapproved modifications to equipment may void agency approvals and create safety hazards.
- Check the interlock systems periodically to ensure their effectiveness.
- Do not attempt to service electrical equipment if standing water is present. Use caution when servicing electrical equipment in a high-humidity environment.
- Use tools with insulated handles when working with airfield electrical equipment.

Failure to follow these instructions can result in death or equipment damage

Copyright © ADB Safegate, All Rights Reserved

Copyright © ADB Safegate, All Rights Reserved

2.0 PA-4

PA-4 power adapter units.

Note
PA-2 and PA-3 are no longer available or supported.

PA-4

2.1 About this manual

The manual shows the information necessary to:

- Install and maintain the PA-4 units.

2.2 How to work with the manual

1. Become familiar with the structure and content.
2. Carry out the actions completely and in the given sequence.

Copyright © ADB Safegate, All Rights Reserved

Copyright © ADB Safegate, All Rights Reserved

3.0 Introduction

See Figure 1 . This section describes the ADB Airfield Solutions series-to-regulated-voltage power adapters.

Figure 1: ADB Safegate Power Adapters

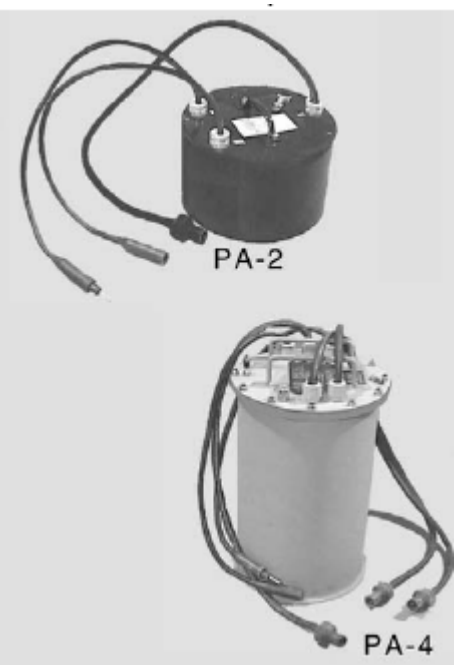

ADB Safegate power adapters can be used to power various ADB Safegate products and are available in three different VA load capacities. Refer to Figure 1 .

Note

ADB Safegate power adapters are not approved for use with other manufacturers' products. Contact the ADB Safegate sales department if it is desired to connect the PA-4 to other products.

Note

An internal tap on the PA-4 reduces the loading on a 3-Step CCR by 15 percent.

Table 1: Power Adapters

Power Adapter	VA Load Capacity	Power Source	Typical Uses	Note
PA-4	120/240 Vac at 670 VA	3- or 5-Step, 6.6 A or 20 A, 60-Hz series lighting circuit	L-849A/C/E runway end identifier lights (REIL) L-807 externally lighted wind cones	A, B, C

A: Not for use on commutated type CCRs [ADB Safegate LC-type CCRs or Crouse-Hinds regulated type (catalog numbers 31000-4, 31000-7.5, and 31000-10) and Crouse-Hinds SCR types] with only a REIL (L-849) load and no other lighting load. If you have any questions, contact the ADB Safegate sales department.
B: Two PA-4 power adapter outputs may be paralleled to provide 120 Vac at 1340 W.
C: The PA-4 power adapter's 120 Vac output, J1, can be used to power four 120 Vac, 150 W incandescent lamps, such as those used in lighting L-806 or L-807 wind cones. If an obstruction light is used on the wind cone, the obstruction light can also be added to the J1 secondary output of the power adapter. See Figures 14 and Figure 5 for typical wiring connections for REILs and windcones.
D: The PA-2 and 3 power adapter are no longer available from ADB Safegate, please use a PA-4 in their sted.

Copyright © ADB Safegate, All Rights Reserved

3.1 Power Adapters

Uses

PA-4 power adapters provide regulated 120/240 VAC, 60 Hz for:

- L-849 REIL systems (Xenon)
- L-806 or L-807 lighted wind cones (Incandescent)

Features

- Provide regulated 120 VAC or 120/240 VAC at 670 VA, when connected to a 3- or 5-step 6.6 A or 5-step 20 A series circuit
- Current sensing option eliminates the need for a separate L-830 isolation transformer when using ADB Safegate's Xenon L-849 REIL system. An extra lead is provided for the current sensing connection.
- An internal tap on the PA-4 reduces the load on a 3-step CCR by 15%
- Watertight construction and maintenance-free operation allows direct earth burial, installation on the surface of the ground, or in a 16-inch diameter by 24-inch deep L-867D base. The installation of the power adapter must be upright.
- Oil-filled for better heat distribution
- Top easily removed to replace internal fuses if necessary

Proper Use

The PA-4 is only guaranteed for use on ADB Safegate L-828 CCRs and for powering ADB L-849 xenon lamp-based Runway End Identification Lights or any steady burning load, such as incandescent wind cones.

Power adapters should not be used on “SCR” type CCRs if the resistive (lamp) load is less than 50% of the rated output for the CCRs. Care should also be exercised to ensure that the use of power adapters does not exceed the VA rating of the CCR. No more than 50% of a CCR's load should be power adapter load. It is not recommended to connect more than two PA-4s on a single CCR.

ADB Safegate power adapters have been designed and tested to operate with ADB equipment (i.e. ADB Safegate CCRs, L-849s, Wind Cones). ADB Safegate power adapters are not guaranteed to work with other manufacturers' equipment. Contact the ADB Safegate Sales Department for additional details.

Per FAA Advisory Circular 150/5345-30J, Section 1.6: Dated 12-FEB-2018, the PA-4 is not ETL Certified. This may affect AIP funding. Please contact your ADB Safegate sales representative for more information.

1.6 High-Voltage Series Circuit Power

Do not use the high-voltage series lighting circuit to power devices that are not certified per AC 150/5345-53, *Airport Lighting Equipment Certification Program*, listed in Apprendix 3, Addendum. Using non-certified devices can result in poor system power factor resulting in unexpected constant current regulator (CCR) shutdowns and lighting circuit start-up problems.

Approximate CCR Load For Fully Loaded Power Adapters

PA-4	2,995 VA

Installation

The primary leads of the power adapter connect directly into the 6.6 A or 20 A series circuit, and each 120 VAC output lead is internally fused. The power adapter is inherently self-protecting in that the output voltage will drop if a fault occurs.

Copyright © ADB Safegate, All Rights Reserved

Packaging

Actual:	22 H × 11.5 Dia. in (55.88 × 29.21 cm)
Palletized:	26 × 14 × 14 in (66 × 35.6 × 35.6 cm)
Net weight:	157 lb (71.2 kg)

Electrical Supply

Power Adapter	Maximum Load	Load Regulation	Input Current	Output Voltage Single Phase 60Hz [1]	Leads [2]
PA-4 (6.6 A)	670 VA	±3% [3]	2.72-6.70 A	120/240 VAC	2 primary leads 3 secondary leads
PA-4 (6.6 A)	670 VA	±3% [3]	2.72-6.70 A	120 VAC	2 primary leads 3 secondary leads
PA-4 (20 A)	670 VA	±3% [3]	8.24-20.30 A	120/240 VAC	2 primary leads 3 secondary leads
PA-4 (20 A)	670 VA	±3% [3]	8.24-20.30 A	120 VAC	2 primary leads 3 secondary leads

Notes

1 PA-4 power adapters are not designed for operation on 50 Hz

2 Primary leads are 30 inches (76.2 cm) long. Secondary leads are 49 inches (124.5 cm) long

3 Valid for 3-step CCR over 4.7A to 6.7 A

3.2 Power Adapter: Required Equipment

Refer to Table 2 for required equipment that is supplied. Refer to Table 3 for required equipment that is not supplied. Refer to the *Parts* section for ordering information.

Table 2: Required Equipment Supplied

Description	Quantity
Power adapter	1
Instruction manual	1 per order

Table 3: Required Equipment Not Supplied

Description	Quantity
L-823 Primary Cable Connector Kit contains one male and one female connector	1
L-823 two-pole plug connector for connection of PA-4 secondary leads if current sensing option is not present	2
L-823 two-pole plug connector for connection of PA-4 secondary power leads and optional current-sensor lead if current sensing option is selected	3
External circuit breaker, if required	1
Ground wire (AWG 8 minimum)	1
L-867 base, 16-in.- (406.4-mm-) diameter, with minimum height of 24 in. (609.6 mm) for PA-4	1

3.3 Specifications

This subsection describes the specifications for the ADB Safegate PA-4 power adapters.

Copyright © ADB Safegate, All Rights Reserved

Construction

Refer to Table 7 for power adapter construction.

Table 4: Power Adapter Construction

Power Adapter	Construction
PA-4	Watertight for direct earth burial, surface installation, or installation in an L-867 base [16-inch- (406.4-mm-) diameter base with a minimum height of 24 inches (609.6 mm)]

Short Circuit Protection

All ADB Safegate adapters are self-protected against an output short circuit.

Serviceability

The PA-4 power adapter is oil-filled and is not serviced at the factory. See Repair (PA-4 Only) .

Copyright © ADB Safegate, All Rights Reserved

4.0 Installation

Warning

Allow only qualified personnel to perform the following tasks. Observe and follow the safety instructions in this document and all other related documentation.

The power adapters are heavy. Exercise caution when lifting or moving power adapters. Use the handle, not the leads, to lift the power adapter. Failure to observe this warning may result in personal injury.

This section describes instructions for installing the PA-4 power adapters on series circuits. Refer to airport project plans and specifications for the specific installation instructions.

Unpacking

Unpack the carton/crate upon receipt and examine the power adapter to ensure no damage has occurred during shipment. Note any exterior damage to the carton that might lead to detection of equipment damage.

If you note any damage to any equipment, file a claim with the carrier immediately. The carrier may need to inspect the equipment.

4.1 Installation

This subsection describes installation information.

4.1.1 Method of Installation

The watertight PA-4 power adapter assemblies are satisfactory for direct earth burial or above-surface installation. Install the PA-4 upright within 15 degrees of vertical. The preferred method of installation is to install the power adapter in a deep L-867 can. Refer to Table 5 for L-867 can dimensions.

Table 5: L-867 Can Dimensions

Power Adapter	L-867 Can Diameter Opening (Minimum) in. (mm)	L-867 Can Height in. (mm)
PA-4	16 (406.4)	24 (609.6)

4.1.2 Wiring Installation for ADB Safegate Products

Warning

Make sure the series loop is turned off before attempting to make any electrical connections. Failure to observe this warning may result in personal injury, death, or equipment damage.

This subsection describes wiring requirements for PAPI systems, REIL, wind cones, and generic loads.

Wiring for PAPI

See Figure 13 in the *Wiring Schematics* section for wiring connections for the L-880 and L- 881, Style B, PAPI.

PA-4 Wiring for REIL

See Figure 5 and Figure 6 in the *Wiring Schematics* section for wiring connections for the L-849A/C REIL and L-849E REIL.

Copyright © ADB Safegate, All Rights Reserved

To connect wiring to the REIL, perform the following procedure:

1. Attach two L-823 two-pole male plugs to the ends of the load wiring (AWG 12 minimum, 600 V), and connect the load wiring to the secondary female receptacles (J1 and J2) on the power adapter. The larger pin connection on the secondary leads is the neutral.
2. If required, route the 120/240 Vac output cables to a customer-supplied external circuit breaker, and then route the cables from the circuit breaker to the load.
3. If optional sensing is used, attach one L-823 two-pole male plug to the ends of the current-sensing connection wiring, and insert the plug into the secondary J4 on the power adapter.

   PA-4 Wiring for Wind Cone and Generic Loads

   See Figure 14 and Figure 7 in the *Wiring Schematics* section for wiring connections for the L-806 or L-807 lighted wind cone. Refer to Table 6 for plug loads. If the load is 600 VA or less, the load on each 120 Vac output must be as evenly balanced as possible.

Table 6: Plug Loads for Wind Cones

Plug	Maximum VA Load
Secondary female plug J2	300
Secondary female plug J1	370

4.1.3 Paralleling PA-4 Power Adapters

See Figure 2 . Parallel any PA-4 power adapter to supply 120 Vac at 1340 W (2 x 670 W).

Figure 2: Paralleling PA-4 Power Adapter

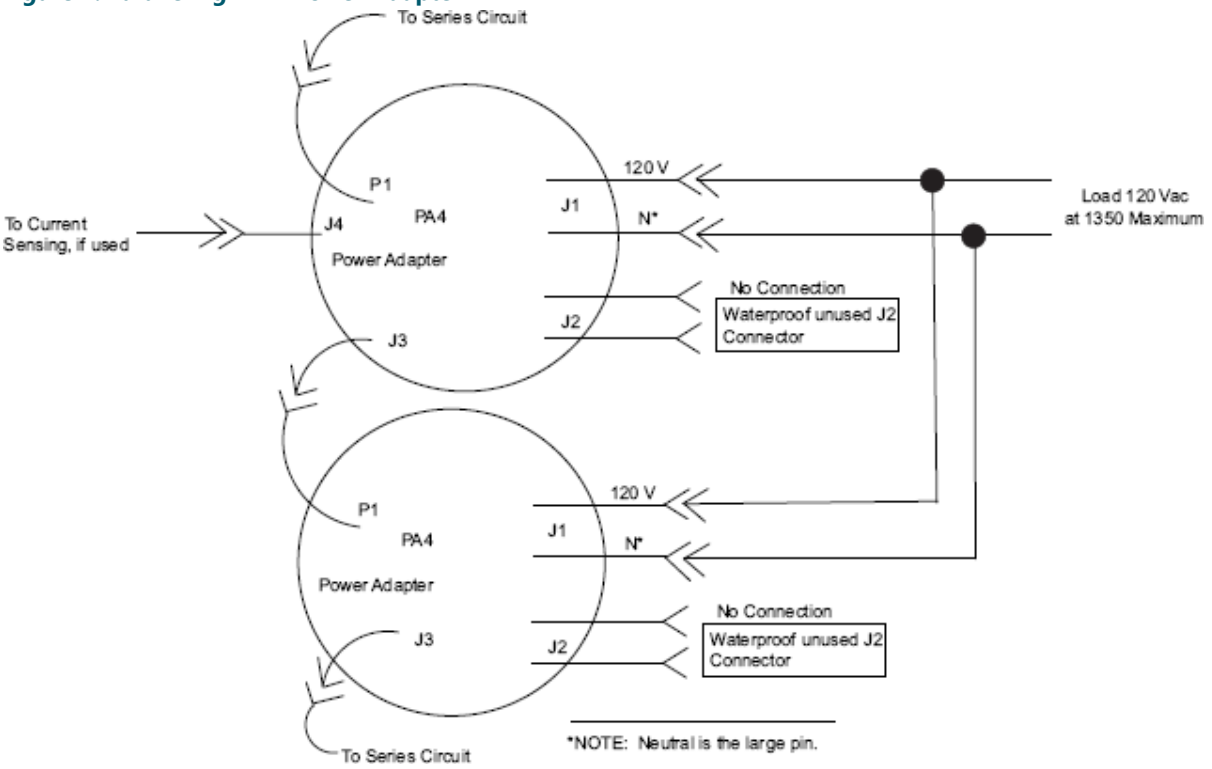

Copyright © ADB Safegate, All Rights Reserved

4.2 Wiring Checkout and Startup

To verify wiring is working properly, perform the following:

- Check for proper installation and firm connections.
- Measure output voltage of power adapter on each CCR output step using a true rms voltmeter while the load on the power adapter is turned on.

Note

No actual startup procedure for the power adapter exists. The power adapter is considered to be a part of the runway lighting circuit, and has no on/off switching devices. Power is present on the output leads of the power adapter when the series lighting circuit is energized.

Copyright © ADB Safegate, All Rights Reserved

Copyright © ADB Safegate, All Rights Reserved

5.0 Repair (PA-4 Only)

Warning

- Read installation instructions in their entirety before starting installation.
- Refer to the FAA Advisory Circular AC 150/5340-26, Maintenance of Airport Visual Aids Facilities, for instructions on safety precautions.
- Observe all safety regulations. To avoid injuries, always disconnect power before making any wiring connections or touching any parts. Refer to FAA Advisory Circular AC 150/5340-26.
- Become familiar with the general safety instructions in this section of the manual before installing, operating, maintaining or repairing this equipment.
- Read and carefully follow the instructions throughout this manual for performing specific tasks and working with specific equipment.
- Allow only qualified personnel to perform the following tasks. Observe and follow the safety instructions in this document and all other related documentation.
- De-energize the regulator supplying power to the circuit connected to the power adapter. Failure to observe this warning may result in personal injury, death, or equipment damage.2.4.1 Introduction

Introduction

This section provides procedures for repairing the PA-4 power adapter. It includes disassembling and assembling, changing tap settings, and replacing fuses.

Under normal operating conditions the internal components of the oil-filled PA-4 power adapter will not require service. In the unlikely event of a component failure in the power adapter or if a fuse blows or a tap needs to be changed, the power adapter can be serviced and repaired. Refer to Table 17 for replacement parts for the PA-4 power adapter.

Table 7: PA-4 Power Adapter Replacement Parts

Description	Quantity	Part Number
Capacitor, 26, F	4	20A0019
Fuse NOTE 2	2	47A0082
Heat Shrink 1/2" clear	6-inch	71A0076
Fuseholder	2	49A0143
Gasket Refer to NOTE 1 below.	1	44G00125
Insulating oil	5 gallons (approximately)	Shell DIALA AX. Contact local Shell oil agent or phone 1-800-231-6950.

NOTE 1: The gasket can be used in place of the blue RTV used on the older PA-4 power adapter assemblies.
NOTE 2: Fuses (F1 and F) are located inside the PA tank on the secondary cables and are accessed by removing the core from the canister. See pg 28, Ref Item 1

5.1 Disassembling PA-4 Power Adapter

To disassemble the PA-4 power adapter, perform the following procedure:

1. Turn off the CCR supplying the power adapter, and remove the power adapter from the can in the field for disassembly in a shop. Reconnect the L-823 connectors and close the can to use the series circuit, if necessary.
2. Place the power adapter upright on the floor and remove twelve hex nuts located on the perimeter of the lid of the power adapter.

Copyright © ADB Safegate, All Rights Reserved

Note
Do not lay power adapter on its side to remove hex nuts. Do not remove any other bolts or components found on the outside lid of the power adapter.

3. Once the lid is loose, grasp the handles on the top of the lid and lift the power adapter lid that has the component plate attached out of the canister.

Note
The lid assembly weighs approximately 86 pounds (39.009 kg). It is recommended that two individuals do the lifting. An alternate method is to use a small overhead crane to lift the lid assembly out of the canister.

4. Place the component package on the workbench. Troubleshoot the system and make any necessary repairs. Refer to *Changing PA-4 Power Adapter Fuses* and *Changing PA- 4 Power Adapter Tap Settings* in this section.
5. After repairs have been made, do a systems check by performing the following procedure:
   a) Check the wiring to make sure that all connections are made and properly soldered or crimped.
   b) Verify that repairs that were made correct the problem discovered during the troubleshooting stage.
   c) Megger test from primary to earth ground using 500Vdc.
   The minimum resistance shall be 50M ohms. If resistance exceeds minimum allowed, troubleshoot and correct the problem.
   d) Dielectric test the power adapter with 2000V Ac between the primary and grounded secondary for one (l) minute. Meter should not go to full scale.

Note
A grounded secondary is accomplished as follows: Connect the earth ground lug to each pin on both secondary connectors. Then connect to the common (ground) on dielectric tester.

5.2 Assembling PA-4 Power Adapter

To assemble the PA-4 power adapter, perform the following procedure:

1. Clean gasket.
2. Inspect the condition of the transformer oil. Oil level should be 6 inches (152.4 mm) from the top of the canister (approximately 3.7 gallons). The oil should be replaced if the oil is contaminated with water or dirt.

Note
Shell DIALA AX transformer oil is used in the canister. This oil does not contain any PCBs. Dispose of used oil in accordance with local, state, and federal EPA regulations.

3. Refill with Shell Diala AX transformer oil only. Fill to within 6 inches (152.4 mm) of the top of the canister.
4. Make sure that all components are clean and free of any contaminants. Clean as necessary. If power cords or squeeze connectors have been replaced, make sure the connector is sealed around the cord. Use any quality pipe dope on the connector threads.
5. Replace gasket. Refer to NOTE 1 in Table 17 in the *Repair* section.
6. Position the component package over the canister. Align the holes in the lid with the studs and insert the component package into the canister.
7. Reinstall the twelve nuts and lockwashers. Apply Loctite AV or equivalent to the stud threads and then install hex nuts..

CAUTION
Torque hex nuts to 65 in-lbs (7.3 N•m). Tighten in opposite pairs across from each other.

Copyright © ADB Safegate, All Rights Reserved

8. Test for leaks by submerging the assembly in an upright position in a tank of water while using the air-fill valve on the top of the lid to pressurize the power adapter to 12 2 psi (0.828 0.138 bar).

Note

Another way to detect leaks is to pressurize the assembly and then brush a mixture of liquid soap and water over all of the joints, connections, and seams.

CAUTION

The pressure relief valve is set for 18-22 psi (1.241-1.517 bar). Do not exceed 14 psi (.965 bar).

9. Repair leaks, if necessary.

5.3 Changing PA-4 Power Adapter Tap Settings

The PA-4 power adapter's 5-step (6.6 A or 20 A) tap setting (tap #4) can be used with either a 3- or 5-step constant current regulator (CCR). However, the 3-step tap connection (tap #1) can be used only with a 3-step CCR.

To change the tap setting from either 3-step to 5-step or 5-step to 3-step, perform the following procedure:

1. Disassemble the power adapter. Refer to *Disassembling Power Adapter* in this section.
2. See Figure 3 . Make the appropriate tap change. Tap #1 connection (1) is for 3-step, while tap #4 connection (2) is for 5-step.

Figure 3: Changing PA-4 Taps

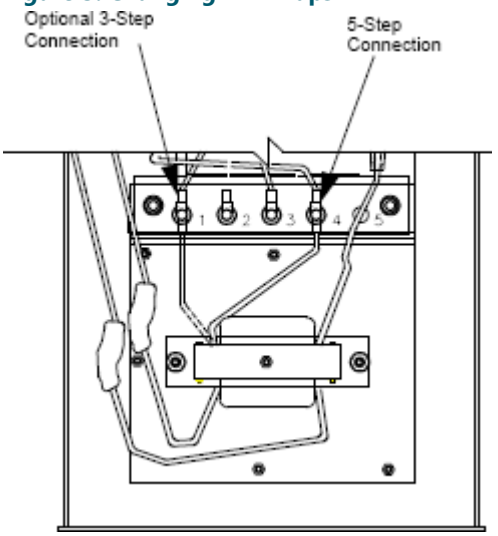

3. After connecting the tap for the desired setting, reassemble the power adapter. Refer to *Assembling Power Adapter* in this section.

5.4 Replacing PA-4 Fuses

Note

The PA-4 has two fuses on the component package.

To replace the PA-4 fuses, perform the following procedure:

1. Disassemble the power adapter. Refer to *Disassembling Power Adapter* in this section.
2. Remove the existing heat shrink.

Copyright © ADB Safegate, All Rights Reserved

3. See Figure 4 . Pull apart the connectors on the old fuse (1) and replace with a new fuse in the fuse holder.

Figure 4: Changing PA-4 Power Adapter Fuses

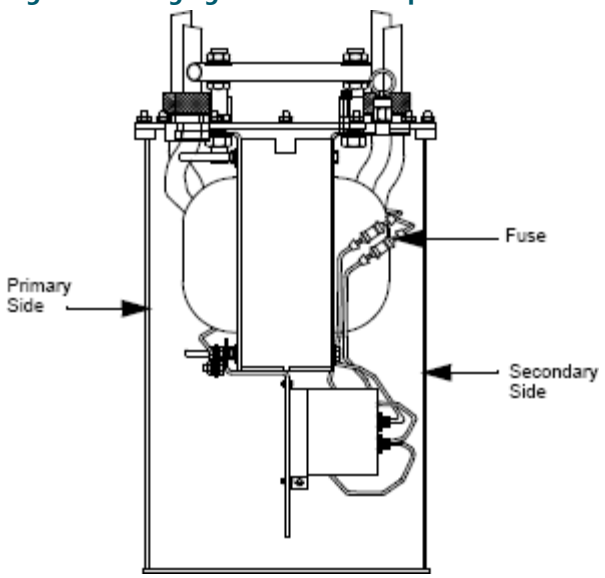

4. Add new heat shrink (ADB #71A0076 length 6-inches)
5. Reassemble the power adapter. Refer to *Assembling Power Adapter* in this section.

Copyright © ADB Safegate, All Rights Reserved

6.0 Parts

To order parts, call ADB Safegate Customer Service or your local representative. Use this five-column parts list, and the accompanying illustration, to describe and locate parts correctly.

Power Adapter 4 Part Numbering System

This subsection provides the ordering code for PA-4 power adapters.

Ordering Code

44D2004 - X X X X

Input Series Circuit
1 = 6.6 A
2 = 20 A

Style
1 = 3-Step (6.6 A only)
2 = 5-Step

Current Sensing
1 = With[1]
2 = Without[2]

Output Voltage
1 = Single phase, 60 Hz, 120 VAC
3 = Military style PA-4

Notes

- Substitute the PA-4 for applications that previously required the PA-2 or PA-3. The PA-4 is not ETL Certified and is not recommended for new installations.

1. For xenon lamp-based REILS with ADB Safegate current sensing (includes a built-in L-830 transformer); no separate L-830 isolation transformer required
2. For REILS without current sensing or wind cones (does not include a built-in isolation transformer)

Copyright © ADB Safegate, All Rights Reserved

Copyright © ADB Safegate, All Rights Reserved

7.0 Wiring Schematics

This section provides power adapter wiring connections for the following ADB Safegate products:

- L-849A-C REIL
- L-849E REIL
- Externally lighted L-806/L-807 wind cones
- Generic load

7.1 Power Adapter Wiring Connections for L- 849A-C REIL

See Figure 5 .

Figure 5: Wiring Connections for L-849A/C REIL

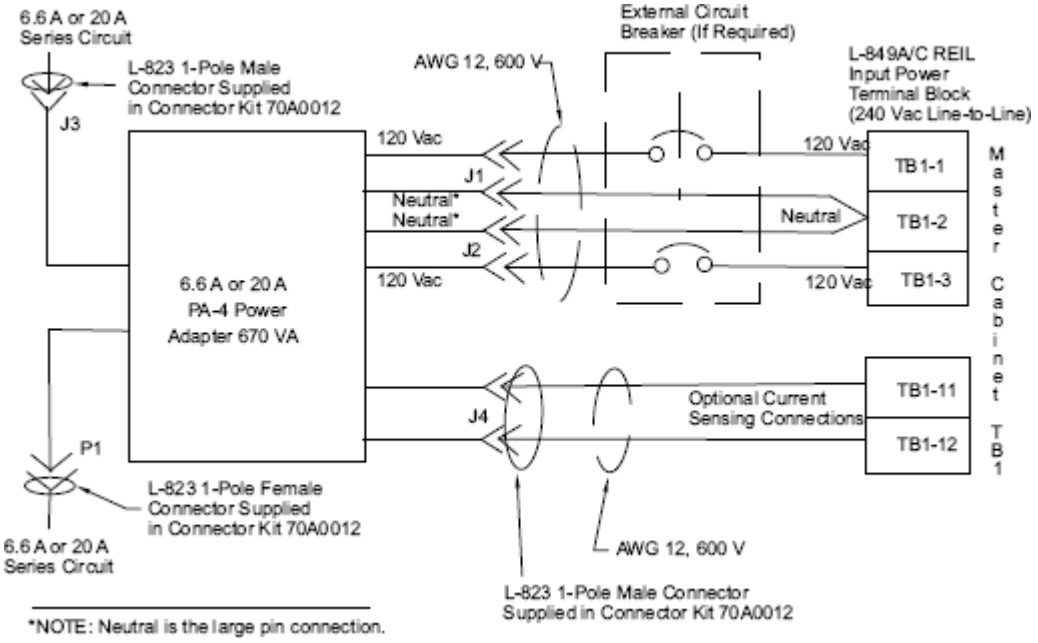

Copyright © ADB Safegate, All Rights Reserved

7.2 Power Adapter Wiring Connections for L- 849E REIL

See Figure 6 .

Figure 6: Wiring Connections for L-849E

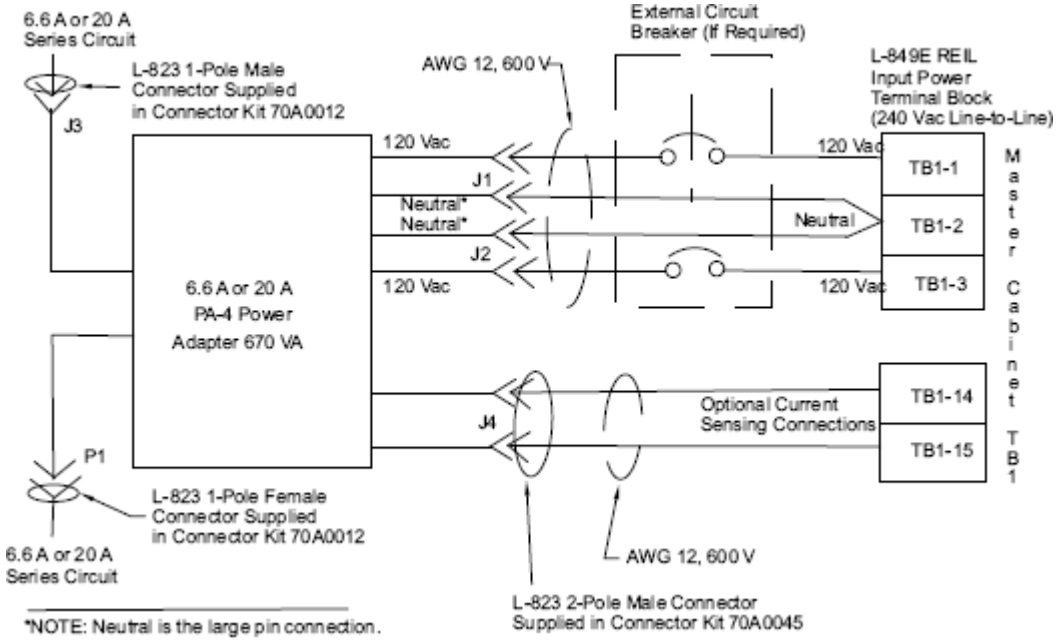

7.3 Power Adapter Wiring Connections for Externally Lighted L-806/L- 807 Wind Cones

See Figure 7 .

Figure 7: Wiring Connections for Externally Lighted L-806/L-807 Wind Cones

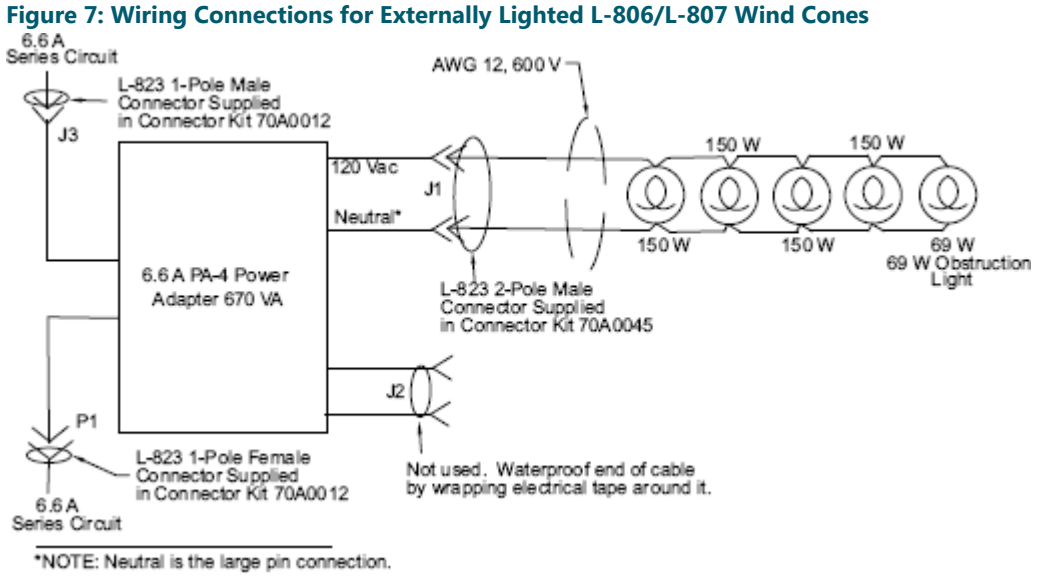

Copyright © ADB Safegate, All Rights Reserved

7.4 Power Adapter Wiring Connections for Generic Loads

See Figure 8 .

Figure 8: Wiring Connections for Generic Loads

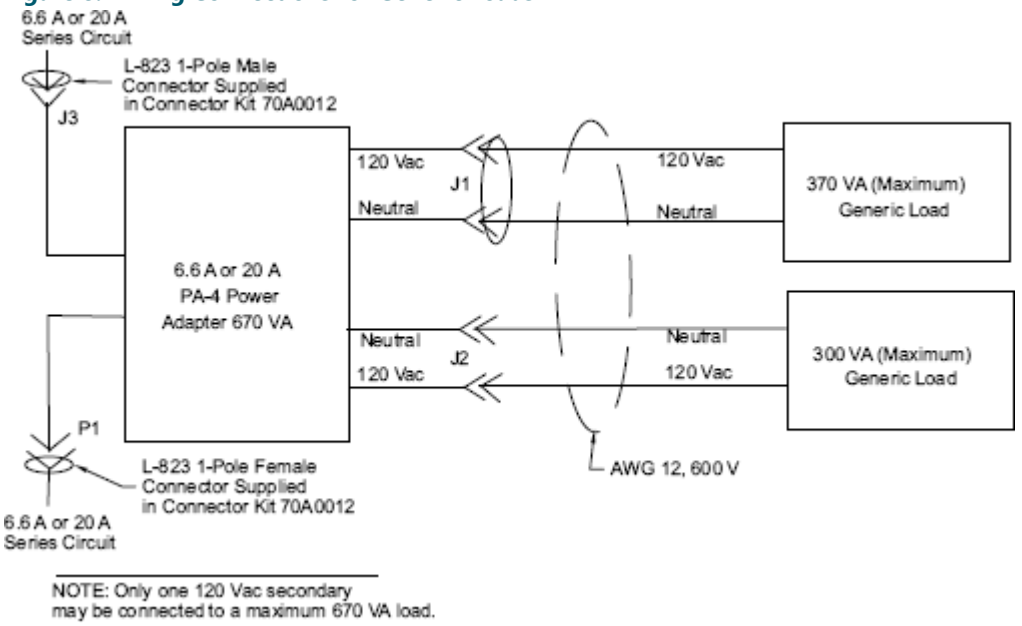

Copyright © ADB Safegate, All Rights Reserved

Copyright © ADB Safegate, All Rights Reserved

Appendix A: SUPPORT

Our experienced engineers are available for support and service at all times, 24 hour/7 days a week. They are part of a dynamic organization making sure the entire ADB Safegate is committed to minimal disturbance for airport operations.

Table 8: ADB Safegate Support

ADB Safegate knows that our equipment is used in one of the busiest industries in the world, where down-time costs money and creates delays for airlines and their passengers. As one of the world's leading suppliers of airport systems, ADB Safegate is committed to ensuring that our customers are able to get the most out of your equipment, regardless of the location or the time of day. For this reason, ADB Safegate has established the ADB Safegate Support service.
ADB Safegate Support is a unique service provided by ADB Safegate to our customers, free of charge during the warranty period or as a service contract. Any time of day, any day of the year, an ADB Safegate engineer is on standby to answer questions and assist with any problems that may arise. Qualified technical assistance is just a phone call or an e-mail away, 24-7 worldwide.

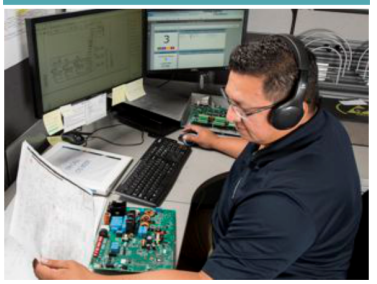

Note

For more information, see www.adbsafegate.com, or contact ADB Safegate Support via email at support@adbsafegate.com or

Brussels: +32 2 722 17 11

Europe: +46 (0)40 699 17 40

Americas: +1 614 861 1304. Press 3 for technical service or press 4 for sales support.

China: +86 (10) 8476 0106

A.1 ADB Safegate website

The ADB Safegate website, www.adbsafegate.com , offers information regarding our airport solutions, products, company, news, links, downloads, references, contacts and more.

A.2 Recycling

A.2.1 Local authority recycling

The disposal of ADB Safegate products is to be made at an applicable collection point for the recycling of electrical and electronic equipment. The correct disposal of equipment prevents any potential negative consequences for the environment and human health, which could otherwise be caused by inappropriate waste handling. The recycling of materials helps to conserve natural resources. For more detailed information about recycling of products, contact your local authority city office.

A.2.2 ADB Safegate recycling

ADB Safegate is fully committed to environmentally-conscious manufacturing with strict monitoring of our own processes as well as supplier components and sub-contractor operations. ADB Safegate offers a recycling program for our products to all customers worldwide, whether or not the products were sold within the EU.

ADB Safegate products and/or specific electrical and electronic component parts which are fully removed/separated from any customer equipment and returned will be accepted for our recycling program.

All items returned must be clearly labelled as follows:

- **For ROHS/WEEE Recycling**
- Sender contact information (Name, Business Address, Phone number).
- Main Unit Serial Number.

ADB Safegate will continue to monitor and update according for any future requirements for EU directives as and when EU member states implement new regulations and or amendments. It is our aim to maintain our compliance plan and assist our customers.

Copyright © ADB Safegate, All Rights Reserved

Note

For more information, see www.adbsafegate.com, or contact ADB Safegate Support via email at support@adbsafegate.com or

EU phone +46 40 699 1740.

US phone +1 800 545 4157. 3 for technical service or 4 for sales support

Copyright © ADB Safegate, All Rights Reserved

Company Addresses

ADB SAFEGATE	ADB Safegate Address: Leuvensesteenweg 585, B-1930 Zaventem, Belgium
Contact: Tel.: +32 2 722 17 11, Fax: +32 2 722 17 64	Email: marketing@adbsafegate.com Internet: www.adbsafegate.com
ADB SAFEGATE Americas LLC	ADB Safegate, Americas Address: 977 Gahanna Parkway, Columbus, OH 43230 USA
Contact: Tel.: +1 (614) 861 1304, Fax: +1 (614) 864 2069	Email: sales.us@adbsafegate.com Internet: www.adbsafegate.com
ADB SAFEGATE Malmo	ADB Safegate, Sweden Address: Djurhagegatan 19 SE-213 76 Malmö, Sweden Phone: Fax:
Contact: Tel.: +46 (0)40 699 17 00, Fax: +46 (0)40 699 17 30	Email: marketing@adbsafegate.com Internet: www.adbsafegate.com
ADB Safegate Airfield Technologies Ltd. China	ADB Safegate, China Address: Unit 603, D Block, CAMIC International Convention Center, No 3, Hua Jia Di East road, ChaoYang district, Beijing 100102, P.R. China
Contact: Tel.: +86 (10) 8476 0106, Fax: +86 (10) 8476 0090	Email: china@safegate.com Internet: www.adbsafegate.com

Copyright © ADB Safegate, All Rights Reserved

Powering Your Airport Performance from Approach to Departure

adbsafegate.com

Copyright © ADB SAFEGATE, all rights reserved